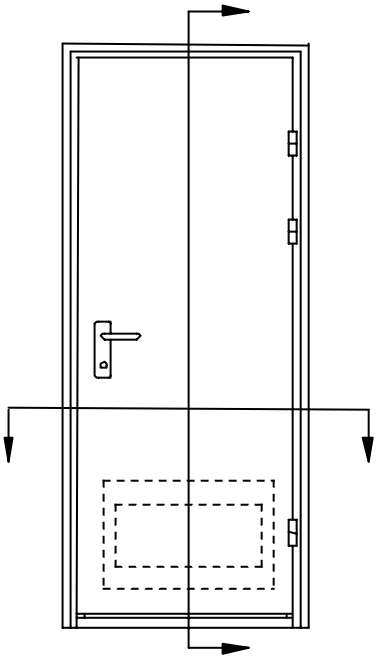

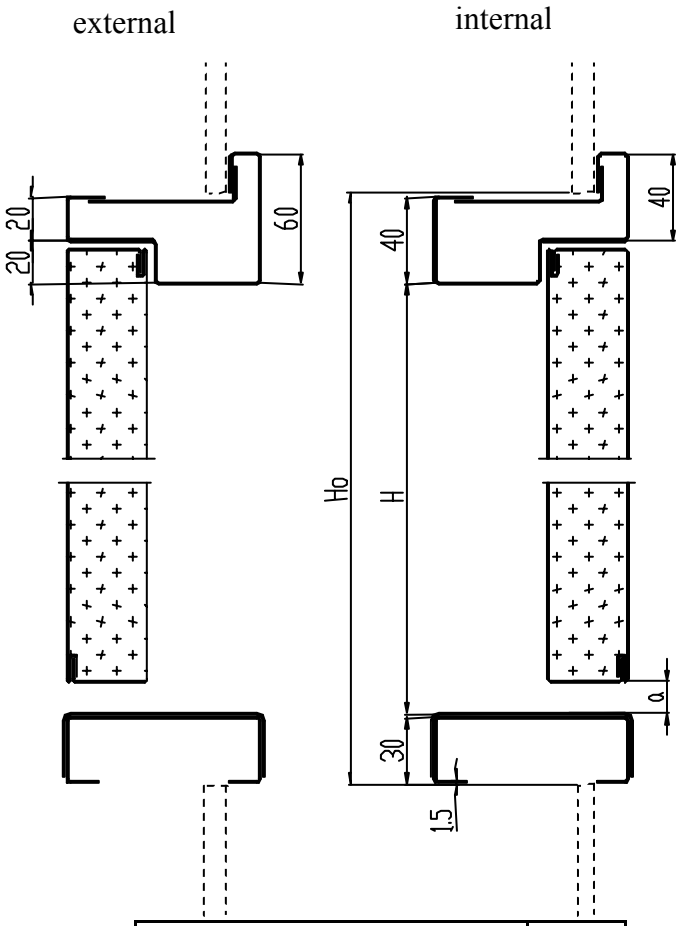

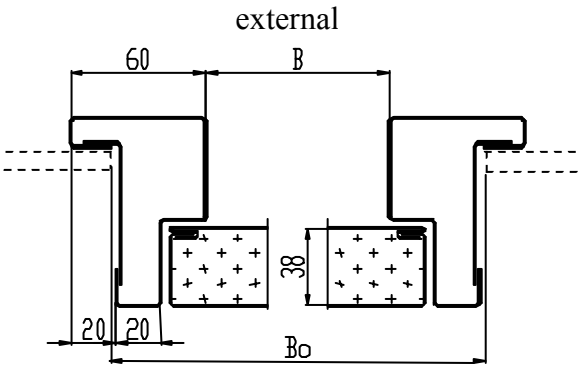

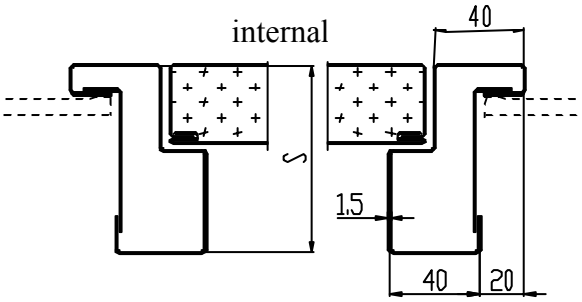

Standard dimensions				Mass
B	H	B_0	H_0	kg
550	1750	635	1825	38
600		685		39
550	1800	635	1875	40
600		685		41
550	1850	635	1925	41
600		685		42

Note:

Width of the door frame section "s" and size of the ventilation gap "a" according to order.

Standard width of frame section s = 92 mm, and standard size of ventilation gap a = 15 mm. (for door with ventilation grill a = 4 mm)

Roemeg Trading Company B.V.
Thomas Edisonweg 8 - 5151DJ Drunen
Postbus 151 - 5150 AD Drunen

Tel 0031 (0)416 391099
Fax 0031 (0)416 391988
erick@roemeg.nl

www.roemeg.nl
Kamer van Koophandel nr. 17164612
ABNAMRO 404578691